Trial Series Inverter Unit

ICS / ICS++ Series Tool

Catalog

Desk Top Lab

EN-V148

Inverter unit

designed for product development

USER

・A Development engineer and an evaluation engineer for A/C system, FAN, Washing machine, Refrigerator and so on.

Feature

・Choice from the Desk Top Laboratories Inc CPU cards.

・Same circuits used in the mass production.

Trial series inverter

●High voltage type　(AC110V　/ AC230V　input type)

Type	Input voltage /output capacity	Inverter structure	Status
T1001-A	AC230V 1.5kW　2kVA	Three phase inverter without PFC Acrylic case, DC FAN	OK
T1102-V100	AC230V　3kW　4kVA	Three phase inverter with PFC Plastic case, AC110V FAN	OK
T1102-V200	AC230V　3kW　4kVA	Three phase inverter with PFC Plastic case, AC220V FAN	OK
T1003-A	AC230V 200W　300VA	Three phase inverter without PFC With acrylic case DC FAN	OK

These inverters do not include CPU card

●Low voltage inverter　(DC input type)

Type	Input voltage /output capacity	Inverter structure	Status
T2001C	DC12-24V　output 5Apeak	Three phase inverter without FAN	OK
T2003C-A	DC12-48V　output 30Apeak	Three phase inverter DC FAN Non-isolated type	OK
T2005C-V100	DC12-48V　output 100A peak	Three phase inverter AC110V FAN Non-isolated type	OK
T2005C-V200	DC12-48V　output 100A peak	Three phase inverter AC230V FAN Non-isolated type	OK
T2005C-DC80-V100	DC80V　output 100A peak	Three phase inverter AC110V FAN Non-isolated type	OK
T2005C-DC80-V200	DC80V　output 100A peak	Three phase inverter AC230V FAN Non-isolated type	OK
T2006A	DC12-24V output 5A peak	Three phase inverter without FAN 3 ports	OK
T2006A-DC48	DC12-48V output 5A peak	Three phase inverter without FAN 3 ports	OK
T2007-DC200	DC200V output 200Apeak	Three phase inverter with 24V fan With Isolated control circuits	CALL

These inverters do not include CPU card

●RL78F14 evaluation inverter

Type	Input voltage	Inverter structure	Status
ECU001-F14-12V	12V		OK

●For device evaluation purpose

Type	Input voltage /output capacity	Inverter structure	Status
T4001-A	Changed by inverter board	T4001-BASE＋CASE T4001-D001 T4001-V001	Planning

These inverters do not include CPU card

●For device evaluation purpose

Option board for T4001-A

Model number	Specification	Status
T4001-D001	Rectifier board	OK
T4001-V001	Inverter board DPAK device	OK
T4001-V002	Inverter board FSB50760	OK
T4001-V003	Inverter board SIM6827M	OK
T4001-V004	Inverter board D2PAK device	OK
T4001-V005	Inverter board TO-220	OK
T4001-V006	Inverter board TO-220	OK

●Option CPU list

Type	CPU type		Status	
T5101	R5F104LEAFP	RL78G14 64pin 0.8mm	OK	
T5102	R5F10PMFL	RL78F14 80pin	OK	
T5103	R5F11BLEA	RL78/G1F 64pin	OK	
T5104	R5F11EBAAFP	RL78/G1G 32pin	OK	
T5105	R5F104BEAFP	RL78/G14 32pin	OK	
T5108	R5F11W68ASM	RL78/G1M 20pin	OK	
T5109		RL78/F24 64pin	Planning	
T5110		RL78/Gxx 64pin (0.65mm)	--	--
T5111		RL78/Gxx 64pin (0.5mm)	Planning	
T5201	R5F562TAADFP	RX62TA 100pin 0.5mm	OK	
T5205	R5F523T5ADFM	RX23T 64pin	OK	
T5206	R5F524TAADFP	RX24T 100pin	OK	
T5210	R5F571MFCDFB	RX71M 144pin	OK	
T5212		RH850F1KM-S1 64pin (TMR I/F)	Call	
T5213-TMR		RX24T 100pin (TMR I/F)	OK	
T5216		RX13T 48pin	OK	
T5220		RX140 64pin	Planning	
T5301	R5F51115ADFM	RX111 64pin 0.5mm	OK	

discount $30 for user who purchases the inverter or ICS board up to two kinds of below CPU cards.

●Option CPU list for T2006 (Two / Three ports　3phase inverter)

Type	CPU type		Status	
T6206	R5F524TAADFP	RX24T(A)　100pin	OK	
T6207	R5F524TEADFP	RX24T(B)　100pin	OK	
T6209	R5F563TEBDFB	RX63T　144pin	OK	
T6211	R5F566TEADFH	RX66T　112pin	OK	
T6214	R5F572TKCDFB	RX72T　144pin	OK	
T6217		RH850P1M-E	Call	
T6218		RA6M1　100pin	OK	
T6219		RA6T1　100pin	OK	

Discount $30 for user who purchases the inverter or ICS board up to two kinds of below CPU cards.

● T5xxx series　T6xxx series　connector conversion board

型名	機能	Satus	
T5X6X	Convert T5xxx series CPU card to T6xxx series	OK	
T6X5X	Convert T6xxx series CPU card to T5xxx series	OK	

T2001C　Inverter Unit

24V　5A peak output Low Voltage inverter

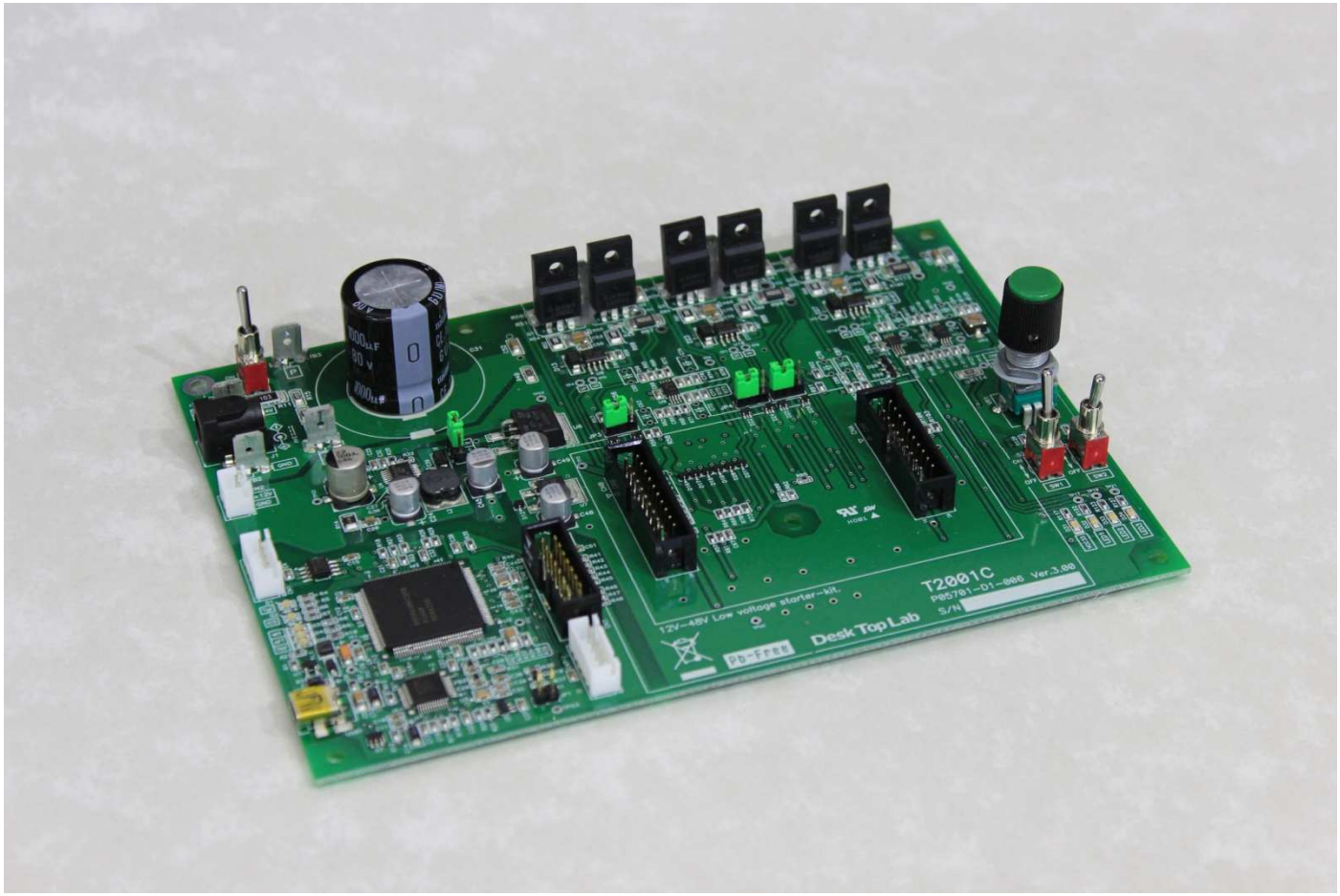

●Inverter block diagram

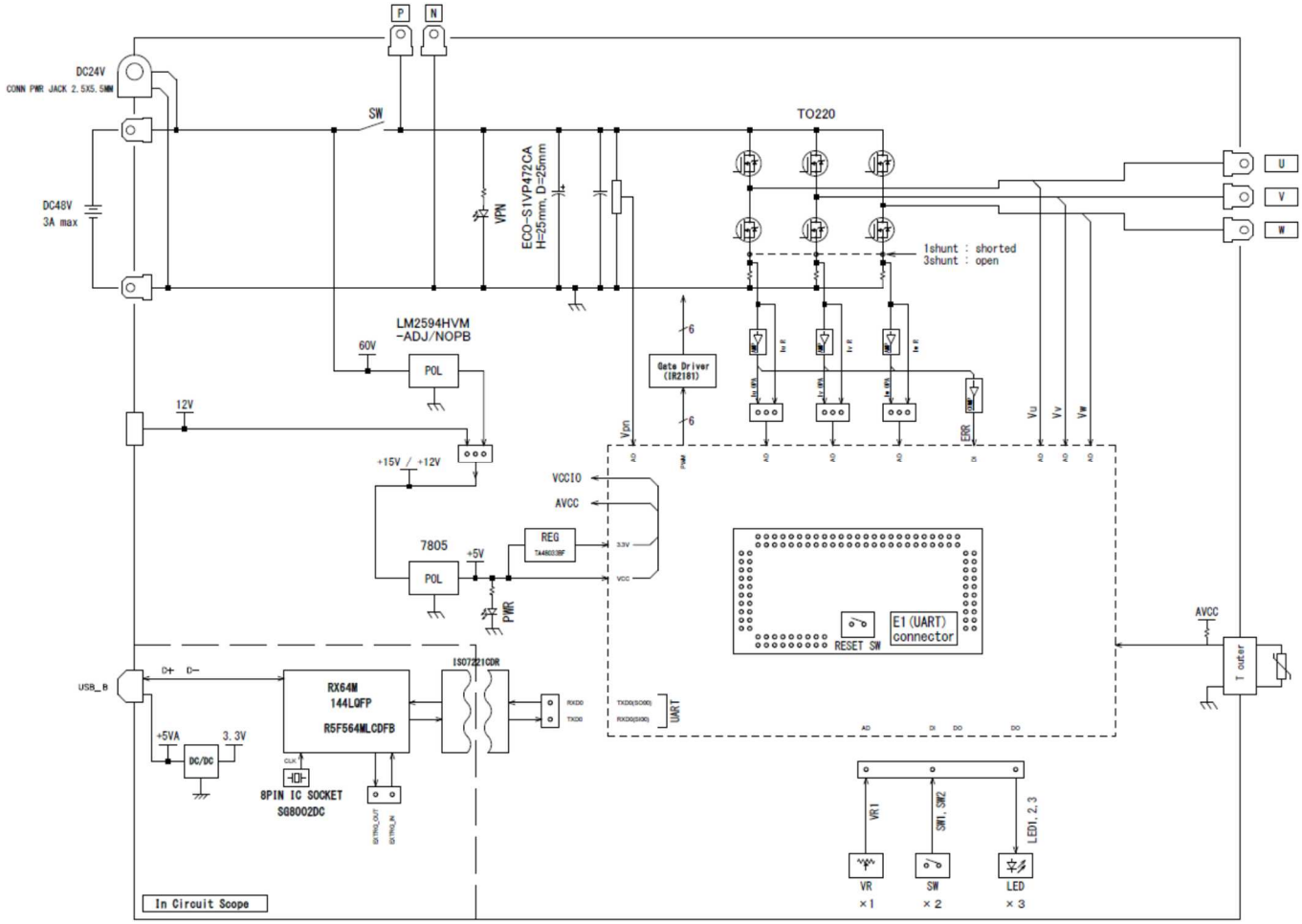

●Specifications

Item		Specification	Remarks
Input rated voltage (Main)		Min DC12V - Max DC48V	
Input rated current		DC 2A	
Input MAX power		50W　@ DC24V input	
Output rated current		5A peak	
	DC link voltage		
	AC output current　x3		
	AC output voltage　x3		
Cooling		NO	
Switching frequency		Up to 20kHz	Depend on application
Deadtime		1.5us (recommendation)	Depend on application
MOSFET		RJK1008　x 6	RENESAS
Control power supply		Generated from DC link / External input	
Isolation		NONE	
Board size		150 x 250 x 85mm	
Case size		None	
Weight		0.5kg	

ICS	ICS++ subset version	Max record length up to 1000points

T2003C-A　Inverter Unit

48V 30A peak Low Voltage inverter

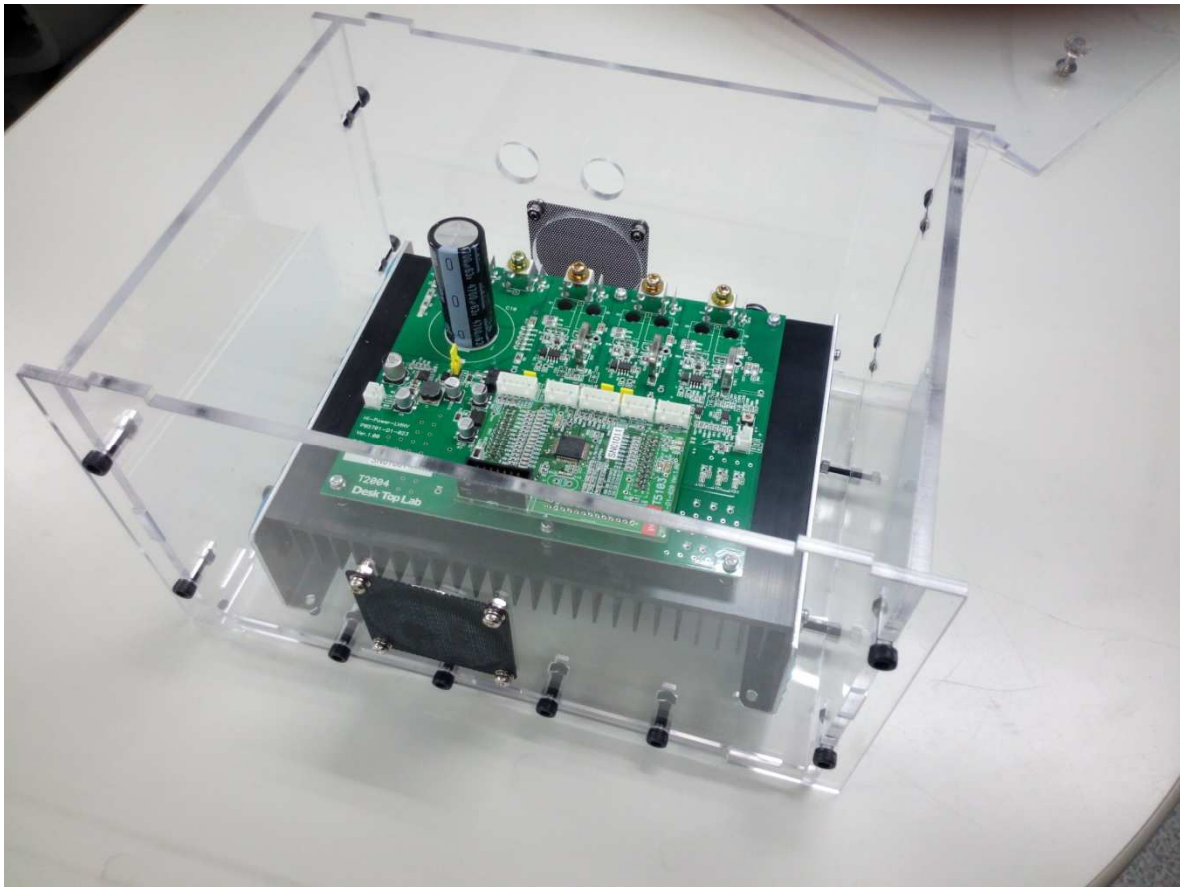

●Inverter block diagram

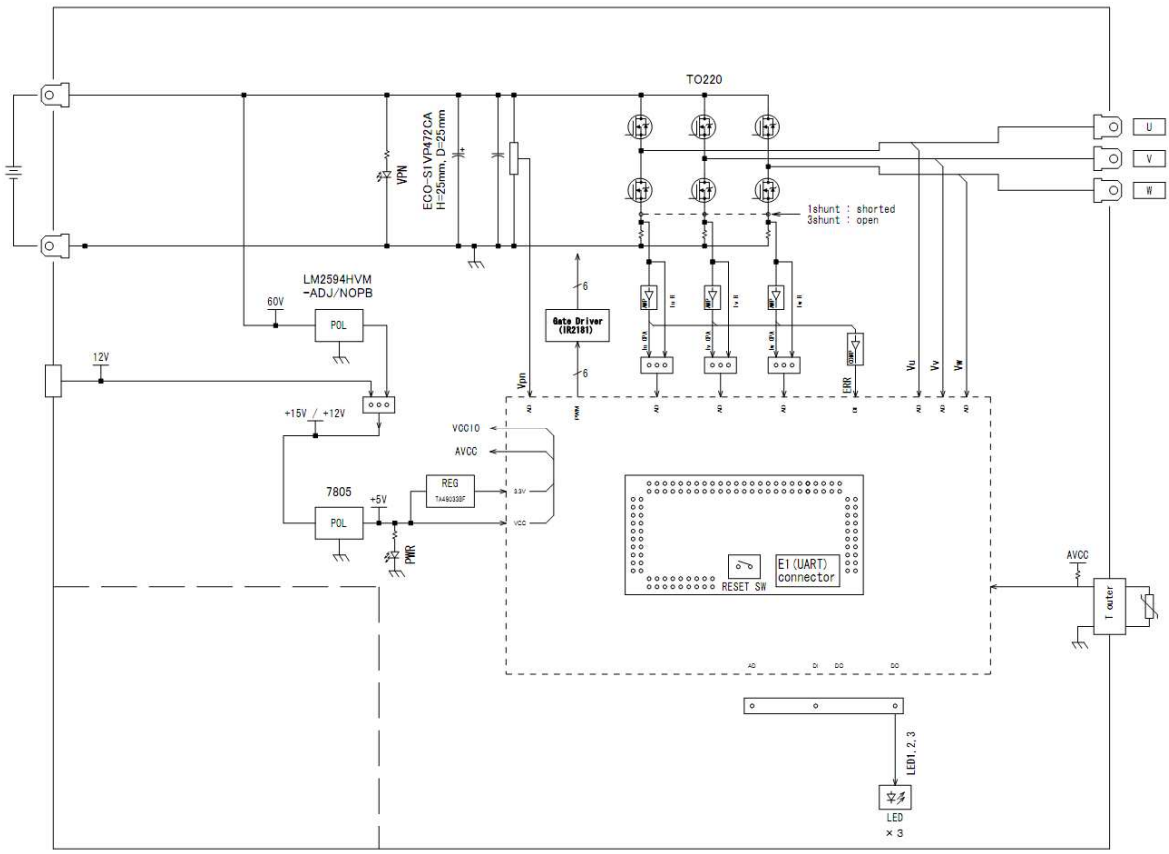

●Specifications

Item		Specification	Remarks
Input rated voltage (Main)		Min DC0V - Max DC48V	
Input rated current		DC 21A	
Input MAX power		1kW @ DC48V input	
Output rated current		30A peak (21A rms)	
Output rated capacity		1kW @ DC48V input	
Sensors	DC link current		
	DC link voltage		
	AC output current x3		
	AC output voltage x3		
Cooling		Forced air cooling	DC FAN
Switching frequency		Up to 20kHz	Depend on application
Deadtime		2us (recommendation)	Depend on application
MOSFET		RJK1008TDD-E0 x 6	RENESAS
Control power supply		Generated from DC link / External input	
Isolation		NONE	
PFC		NONE	
Board size		160 x 132 mm	
Case size		280 x 210 x 195 mm	
Weight		2.4kg	

T2005C series Inverter Unit

T2005C　48V 100A peak output Low Voltage

T2005C-DC80　80V 100A peak output Low Voltage

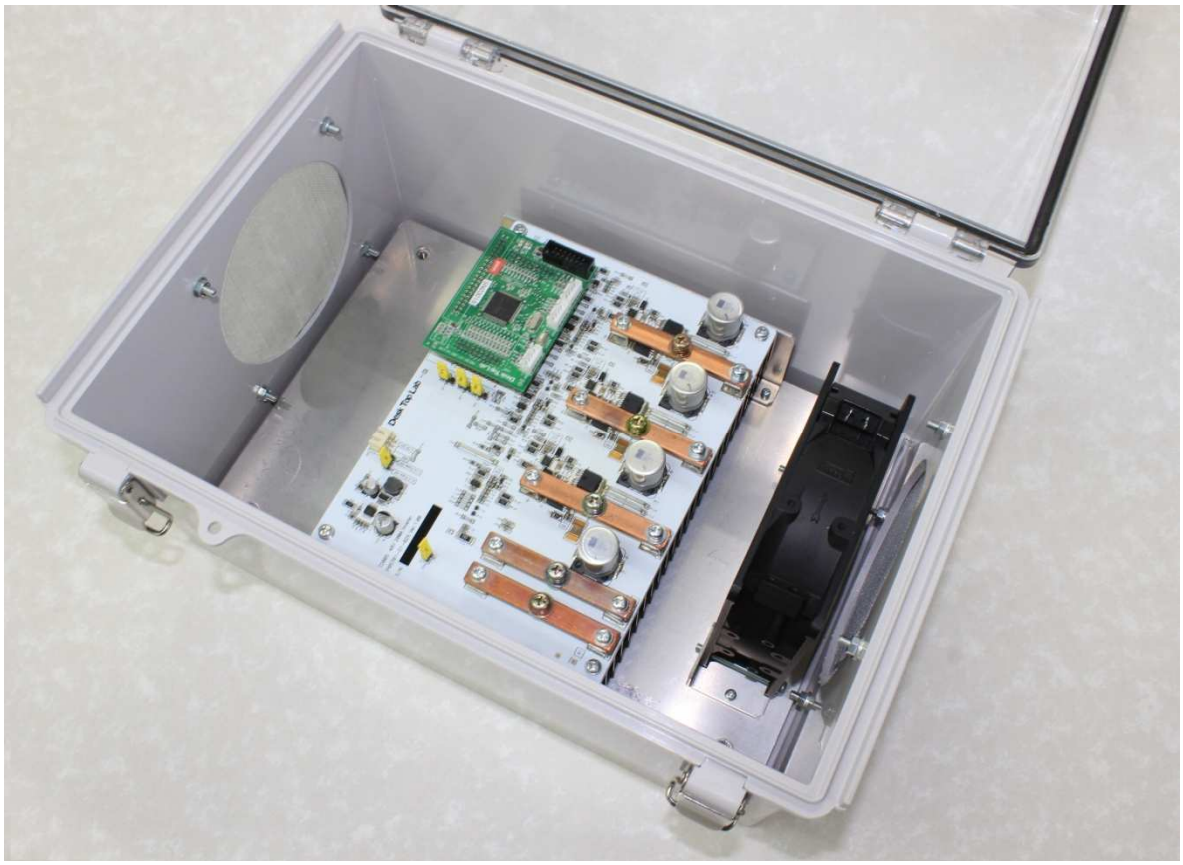

●Inverter block diagram

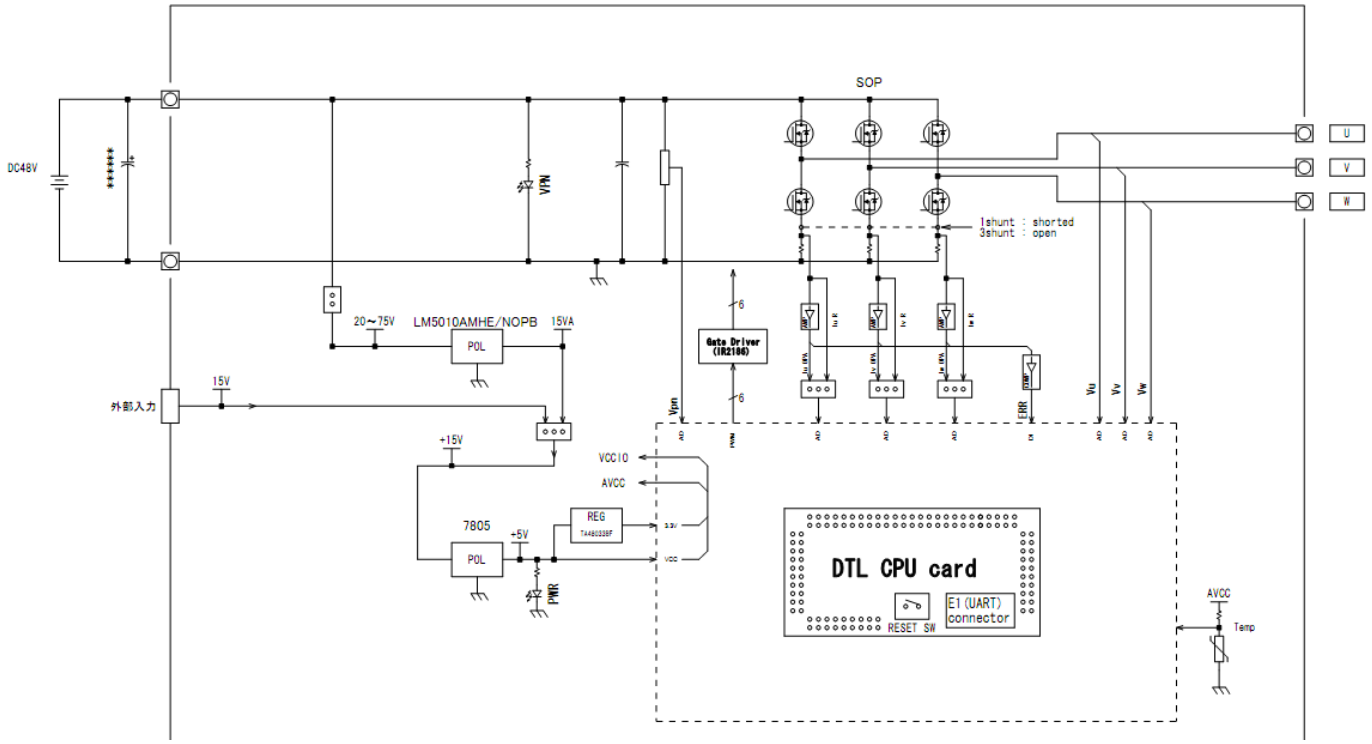

●Specifications

Item		Specification	Remarks
Input rated voltage (Main)		DC0V ～ DC48V	
Input rated current		DC 84A	
Input MAX power		3kW @ DC48V input	
Output rated current		100A peak	
Output rated capacity		3kW @DC48V input	Depend on application
Sensor	DC link voltage		
	AC output current x3		
	AC output voltage x3		
Cooling		Forced air cooling	DC FAN
Switching frequency		Up to 20kHz	Depend on application
Deadtime		2us (recommendation)	Depend on application
MOSFET		IRFS7730-7PPBF	IRF Vdss=75V, Id=239A
Control power supply		Generated from DC link / External input	
Isolation		NONE	
PFC		NONE	
Case size		350 x 280 x 195 mm	
Weight		3.6kg	

T2006A series 3ports Inverter Unit

T2005A　24V 5A peak output　3ports Low Voltage inverter

T2005A-DC48　48V 5Apeak output 3ports Low Voltage inverter

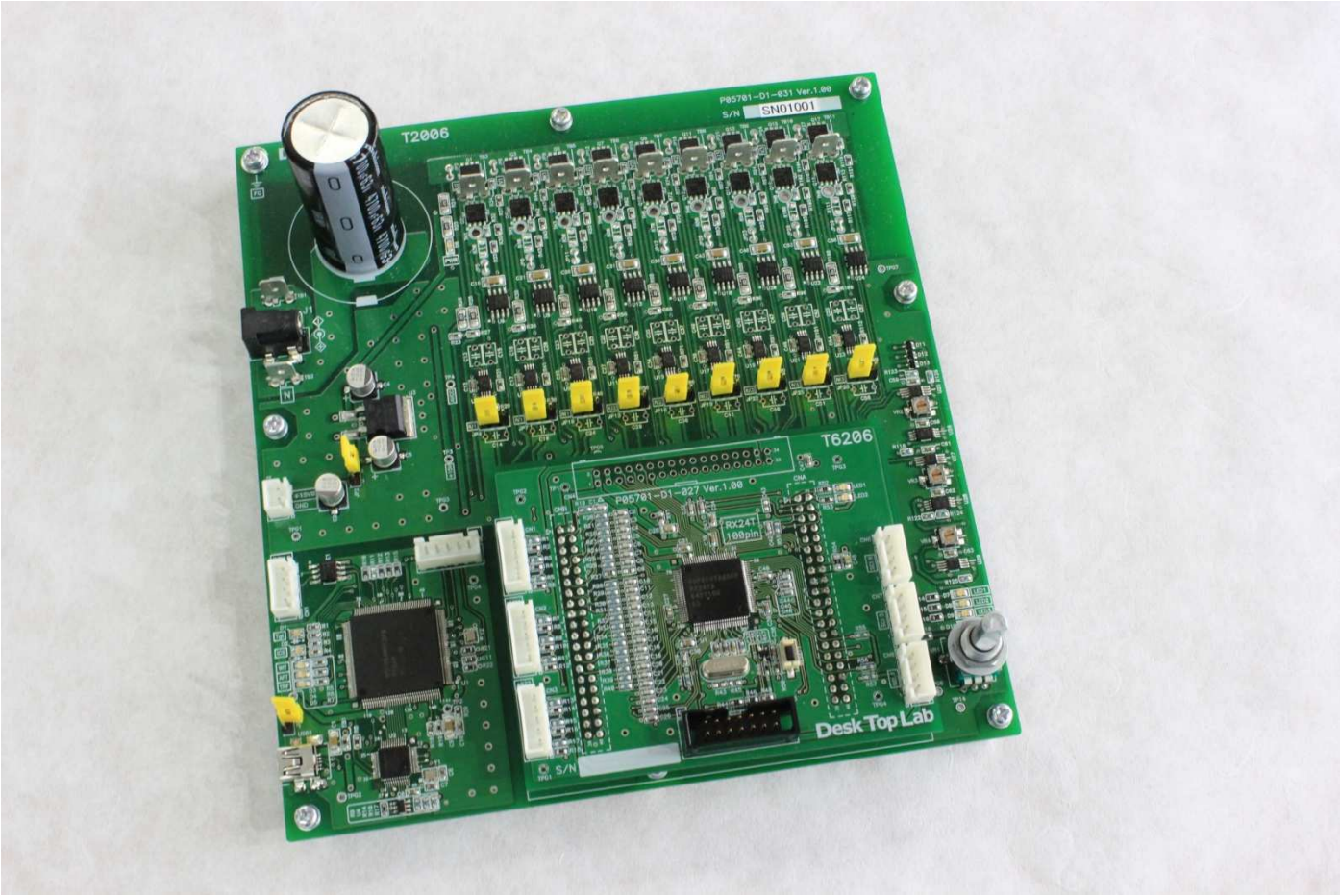

●Inverter block diagram

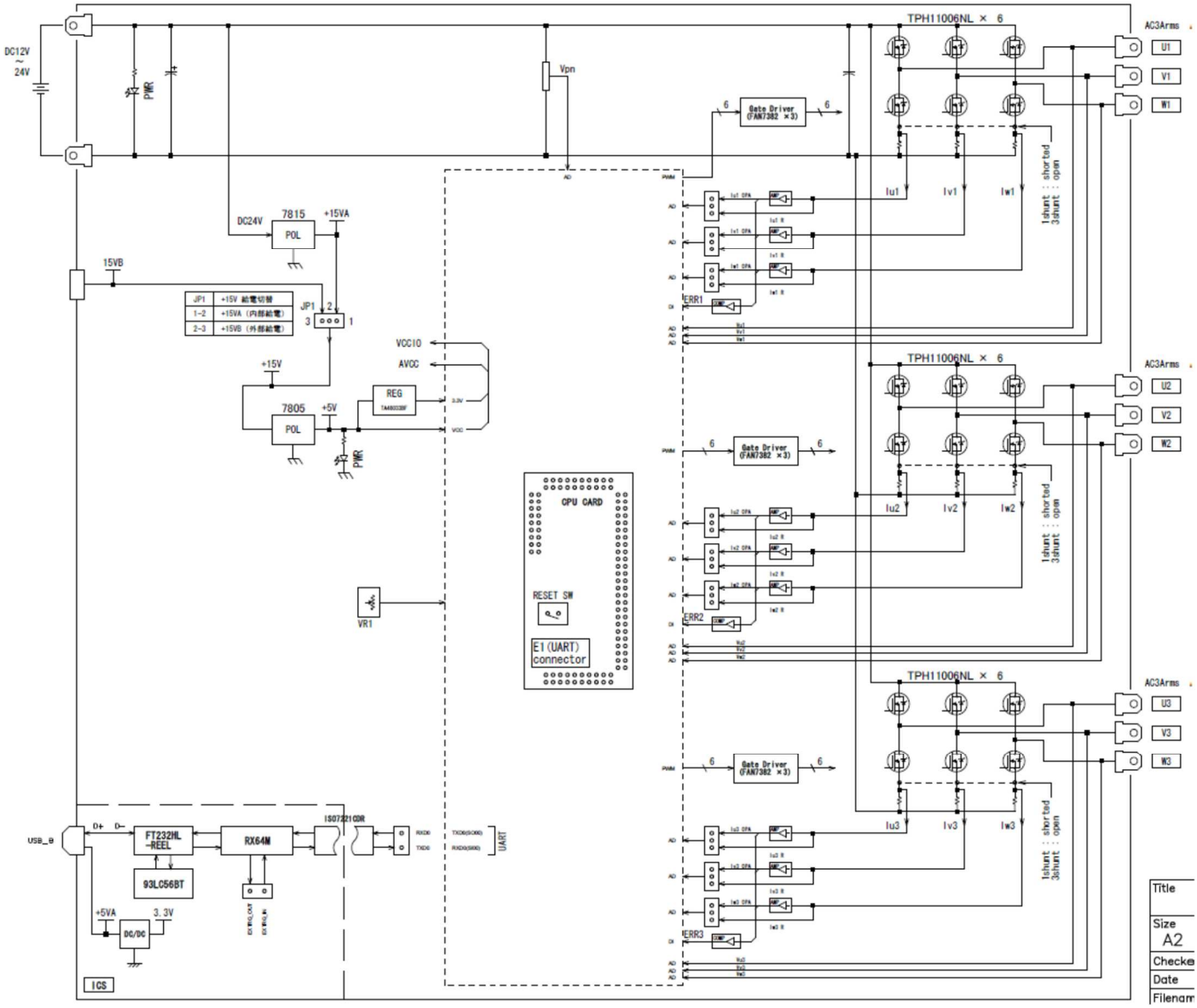

●Specifications

Item	Specification	Remarks
Input rated voltage (Main)	Max DC24V	
Output rated current	5A peak	
Output rated capacity	50W / 60VA x 3ports @ DC24V input	
Cooling	NO	
Control power supply	Generated from DC link / External input	
Isolation	NONE	
Board size	170 x 180 x 60mm	Planning
Weight	220g	
ICS++	ICS++ W2001 subset verion (Max5Mbps)	Record length Up to 1000 points

T1001-A　Inverter Unit

1.5kW / 2kVA inverter

Acrylic case type （-A option） With DC FAN

●Inverter block diagram

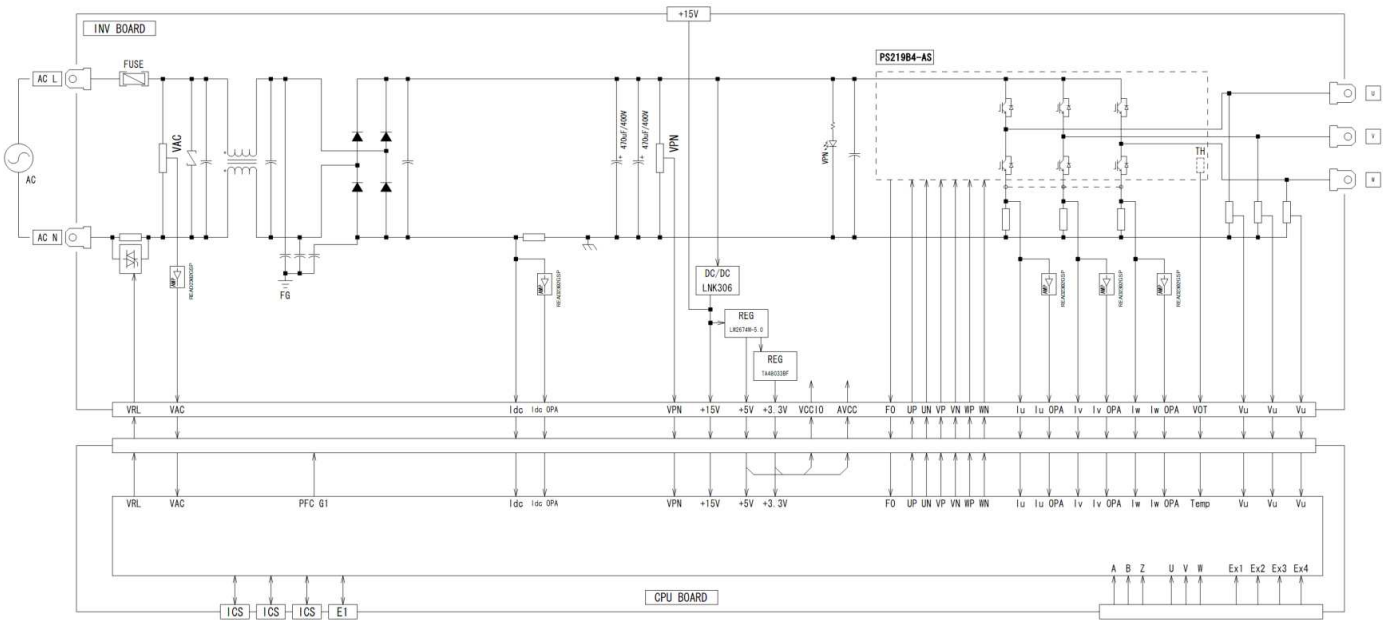

●Specifications

Item		Specification	Remarks
Input rated voltage		Min AC85Vrms - Max AC265Vrms	
Input rated current		NA	
Input MAX power		1.5kW @ AC230V input	
Output rated current		AC5.0Arms @100℃、Fc=15kHz AC8.0Arms @100℃、Fc=5kHz	
Output rated capacity		2kVA @ AC200V output	
Sensors	AC input voltage		
	DC link current		
	DC link voltage		
	AC output current x3		
	AC output voltage x3		
	IPM temperature		
Cooling		No	
Switching frequency		Up to 20kHz	Depend on application
Deadtime		2.5us (recommendation)	Depend on application
Power module (IPM)		PSS15S92F6-A	MITSUBISHI
Control power supply		Generated from DC link	
Isolation		NA	
PFC		NA	
PFC chip (hardware type)		NA	
Board size		180 x 140 x 50 mm	
Case size	T1001-M	200 x 170 x 61 mm	
	T1001-A	280 x 210 x 195 mm	
Weight	T1001-M	1.0kg	With CASE
	T1001-A	2.6kg	With CASE

T1102-V100 / T1102-V200　Inverter Unit

3kW / 4kVA inverter

●Inverter block diagram

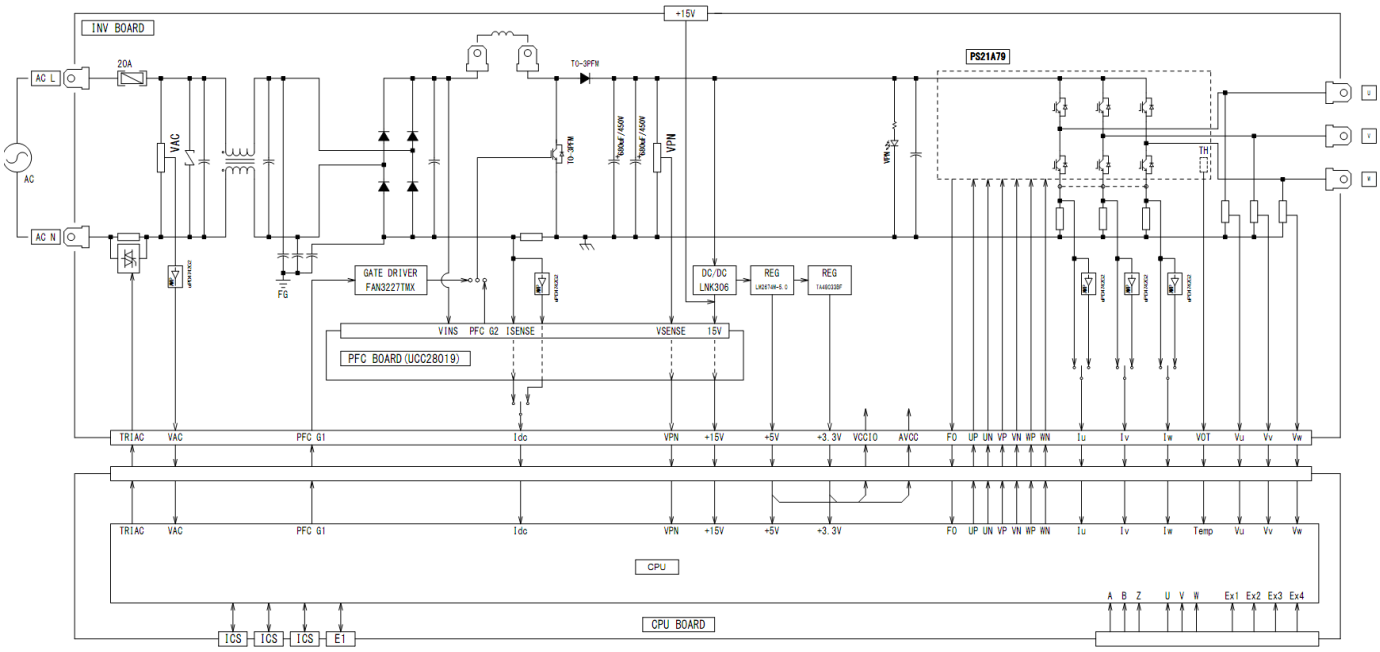

●Specifications

Item		Specification	Remarks
Input rated voltage		Min AC85Vrms - Max AC265Vrms	
Input rated current		AC 15A rms	
Input MAX power		3kW @ AC230V input	
Output rated current		AC11.6A rms	
Output rated capacity		4kVA @ AC200V output	
Sensors	AC input voltage		
	DC link current		
	DC link voltage		
	AC output current x3		
	AC output voltage x3		
	IPM temperature		
Cooling		Forced air cooling	AC input FAN
Switching frequency		Up to 20kHz	Depend on application
Deadtime		2.5us (recommendation)	Depend on application
Power module (IPM)		PS21A79	MITSUBISHI
Control power supply		Generated from DC link	
Isolation		NONE	
PFC switching device		RJK60S8DPM	RENESAS
PFC chip (hardware type)		UCC28019A	TI
Board size		200 x 150 mm	
Case size		250 x 350 x 180 mm	
Weight		3.8kg	

T1003-A　Inverter Unit

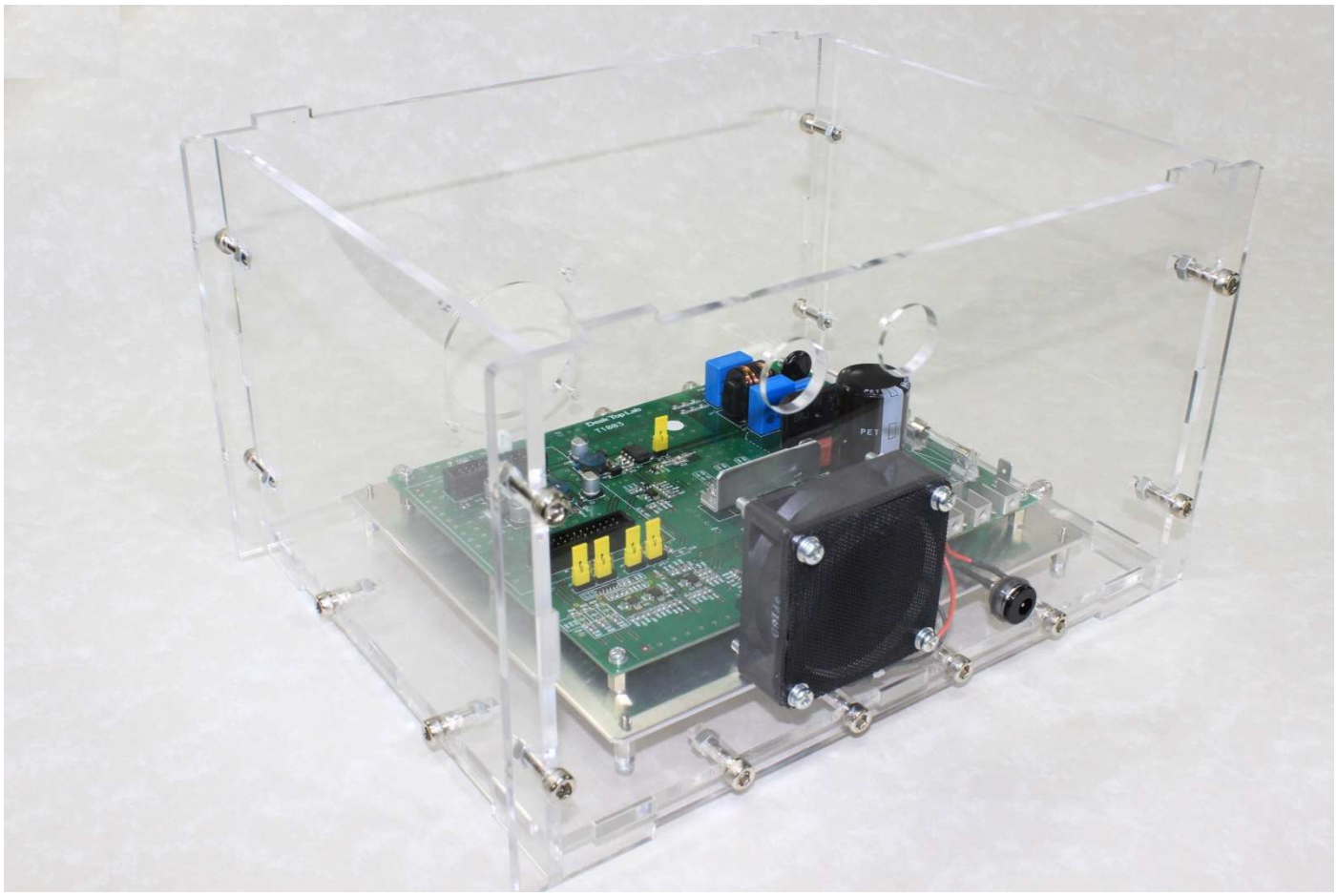

●Inverter block diagram

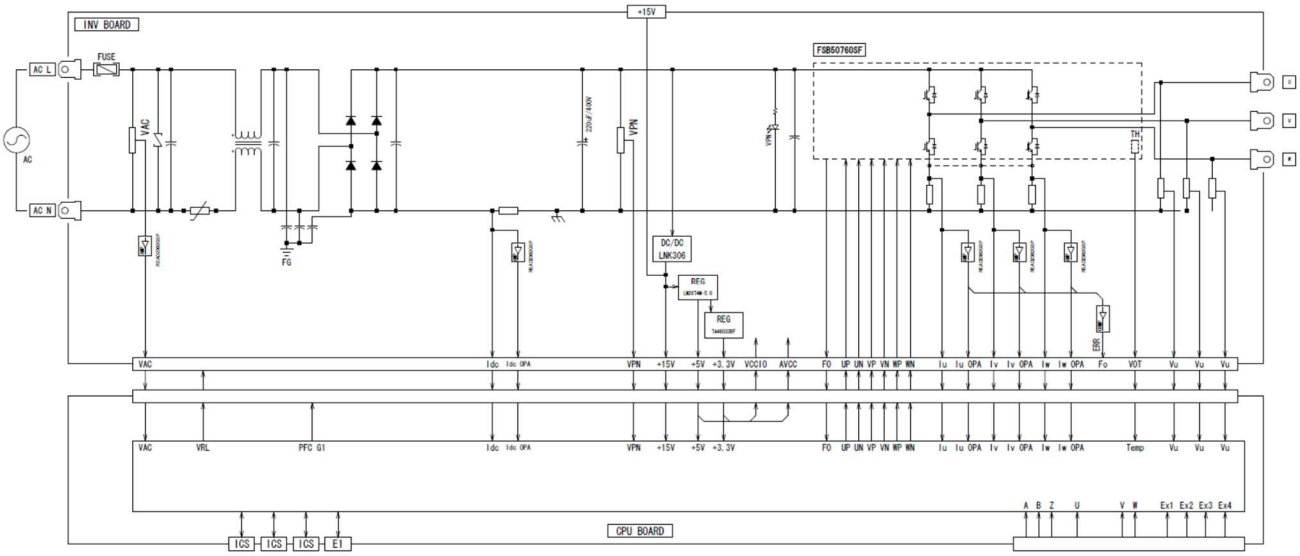

●Specifications

Item		Specification	Remarks
Input rated voltage		Min AC85Vrms - Max AC265Vrms	
Input rated current		NA	
Input MAX power		200W @ AC230V input	
Output rated current		AC1.5Arms Fc=15kHz	
Output rated capacity		300VA @ AC200V output	
Sensors	AC input voltage		
	DC link current		
	DC link voltage		
	AC output current x3		
	AC output voltage x3		
	IPM temperature		
Cooling		DC FAN 24V	
Switching frequency		Up to 20kHz	Depend on application
Deadtime		1.5us (recommendation)	Depend on application
Power module (IPM)		Model T1003-A FSB50760SF	FairChild / On semi
Control power supply		Generated from DC link	
Isolation		NA	
PFC		NA	
PFC chip (hardware type)		NA	
Case size		281 x 220 x 180 mm	
Weight		2.0kg	With CASE

T4001-A　Device Evaluation Inverter Unit

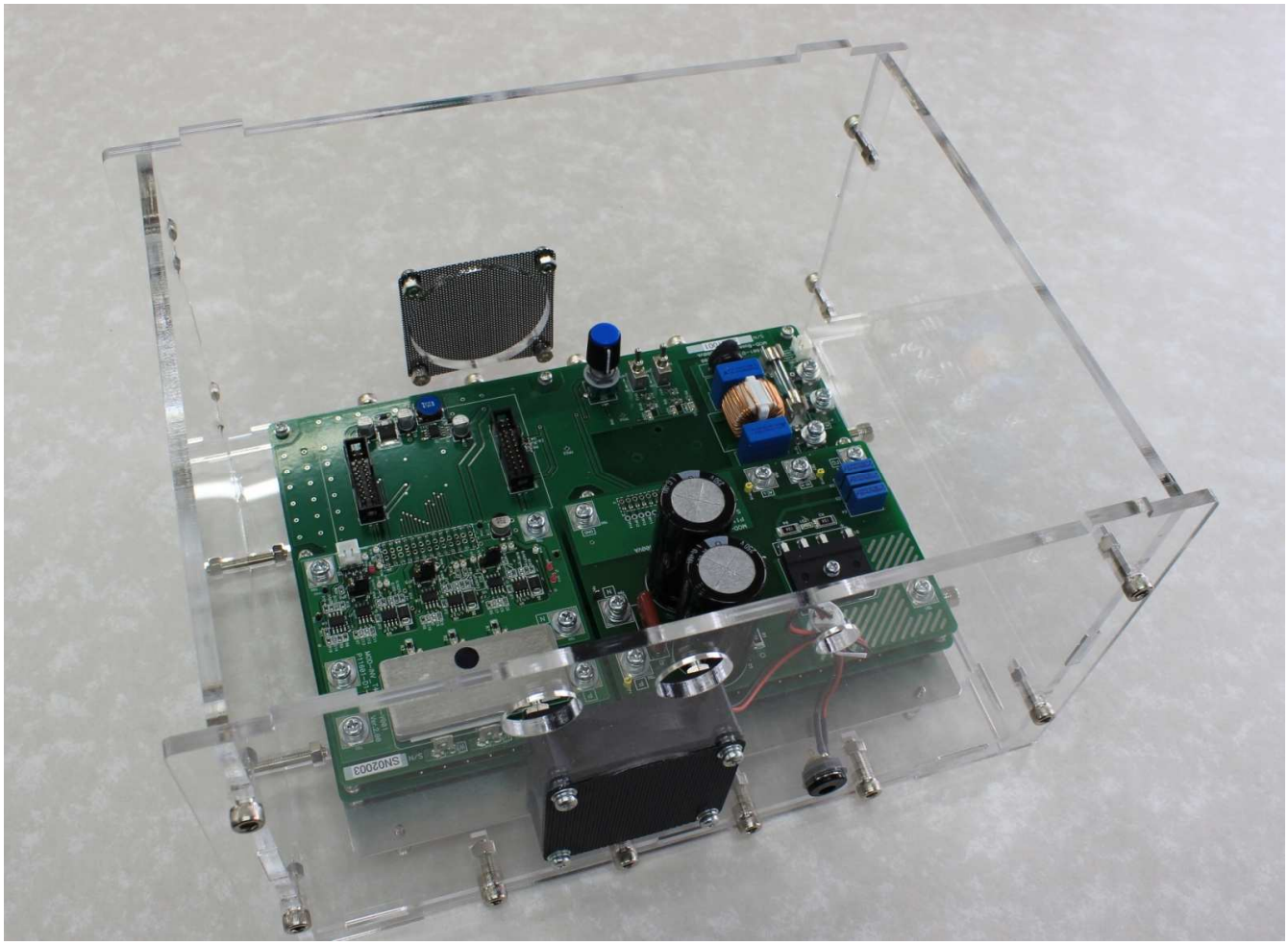

・Feature

・An acryl case makes us convenient for adjustment or experiment

・Easy to change IGBT or Pre-driver devices

・This inverter can use Trial series CPU card.

●Specifications (T4001-A　set)

Item		Specification	Remarks
Input rated voltage		Depends on each inverter module	
Output rated current		Depends on each inverter module	
Output rated capacity		Depends on each inverter module	
Sensors	DC link voltage		
	AC output current x3		
	AC output voltage x3		
Cooling		DC FAN 24V	
Switching frequency		Depends on each inverter module	Depend on application
Deadtime		Depends on each inverter module	Depend on application
Power module board		Depends on each inverter module	
Control power supply		Generated from DC link	
Isolation		NA	
PFC		NA	
PFC chip (hardware type)		NA	
Case size		281 x 220 x 180 mm	
Weight		2.2kg	With CASE

・T4001-A　includes　below boards.

T4001-BASE　: Base board　that carries　rectifier board, inverter board and CPU board.

T4001-D001　: Rectifier board

T4001-V001　: Inverter board with DPAK IGBT

・OPTION

T4001-V001　: Inverter board with DPAK IGBT device

T4001-V002　: Inverter board with FairChild IPM　FSB50760

T4001-V003　: Inverter board with SANKEN IPM　SIM6827M

T4001-V004　: Inverter board with D2PAK / LDPAK IGBT device

T4001-V005　: Inverter board with TO-220 MOSFET device

T4001-V006　: Inverter board with TO-220 IGBT device

OPTION	内容
T4001-D001	Rectifier board
T4001-V001	Inverter board with DPAK IGBT device
T4001-V002	Inverter board with FairChild IPM　FSB50760
T4001-V003	Inverter board with SANKEN IPM　SIM6827M
T4001-V004	Inverter board with D2PAK / LDPAK IGBT device
T4001-V005	Inverter board with TO-220 IGBT device
T4001-V006	Inverter board with TO-220 IGBT device

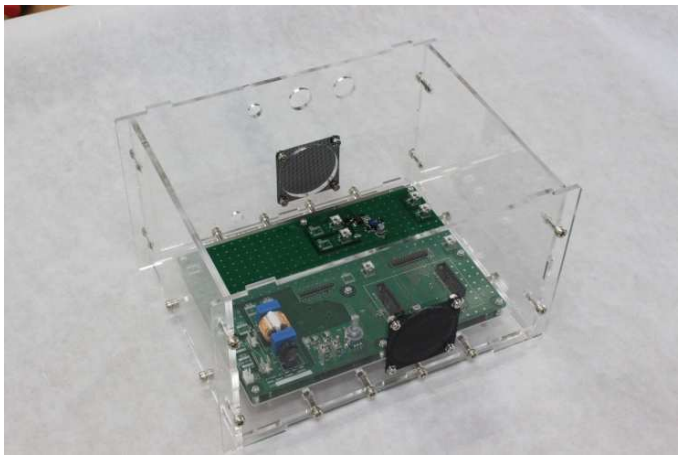

T4001-BASE (board with case)

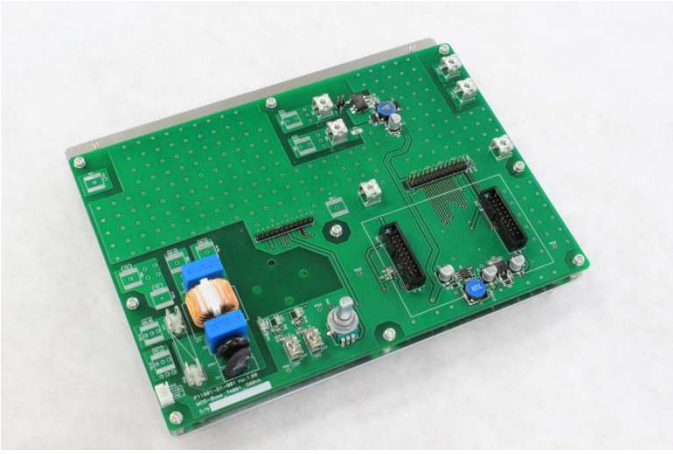

T4001-BASE　(board only)

T4001-D001

T4001-V001

T4001-V002　　(FSB50760)

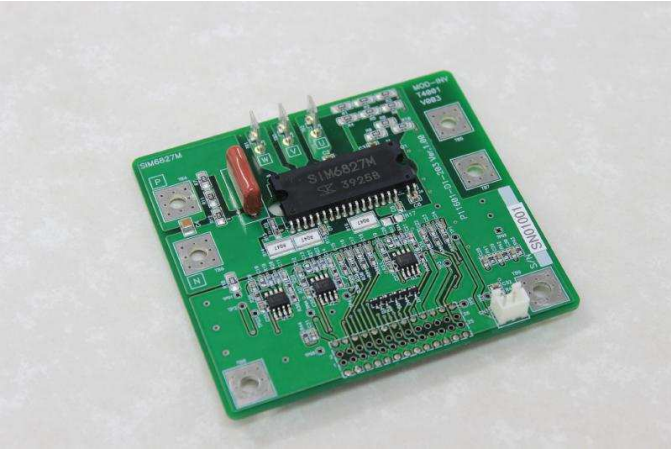

T4001-V003

T4001-V004 (LDPAK module)

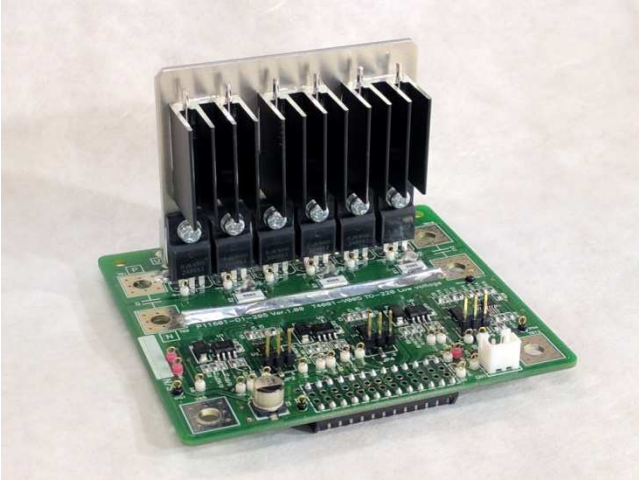

T4001-V005 (TO-220　Low voltage module)

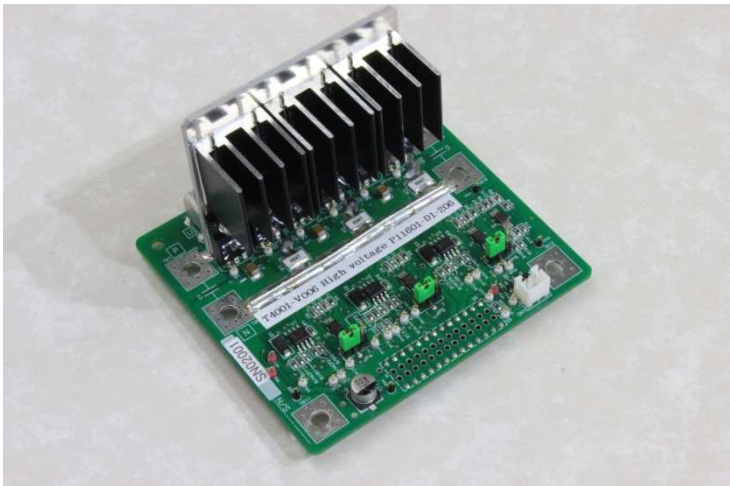

T4001-V006 (TO-220　High voltage module)

ECU001-F14-12V　RL78/F14　ECU Evaluation Inverter Unit

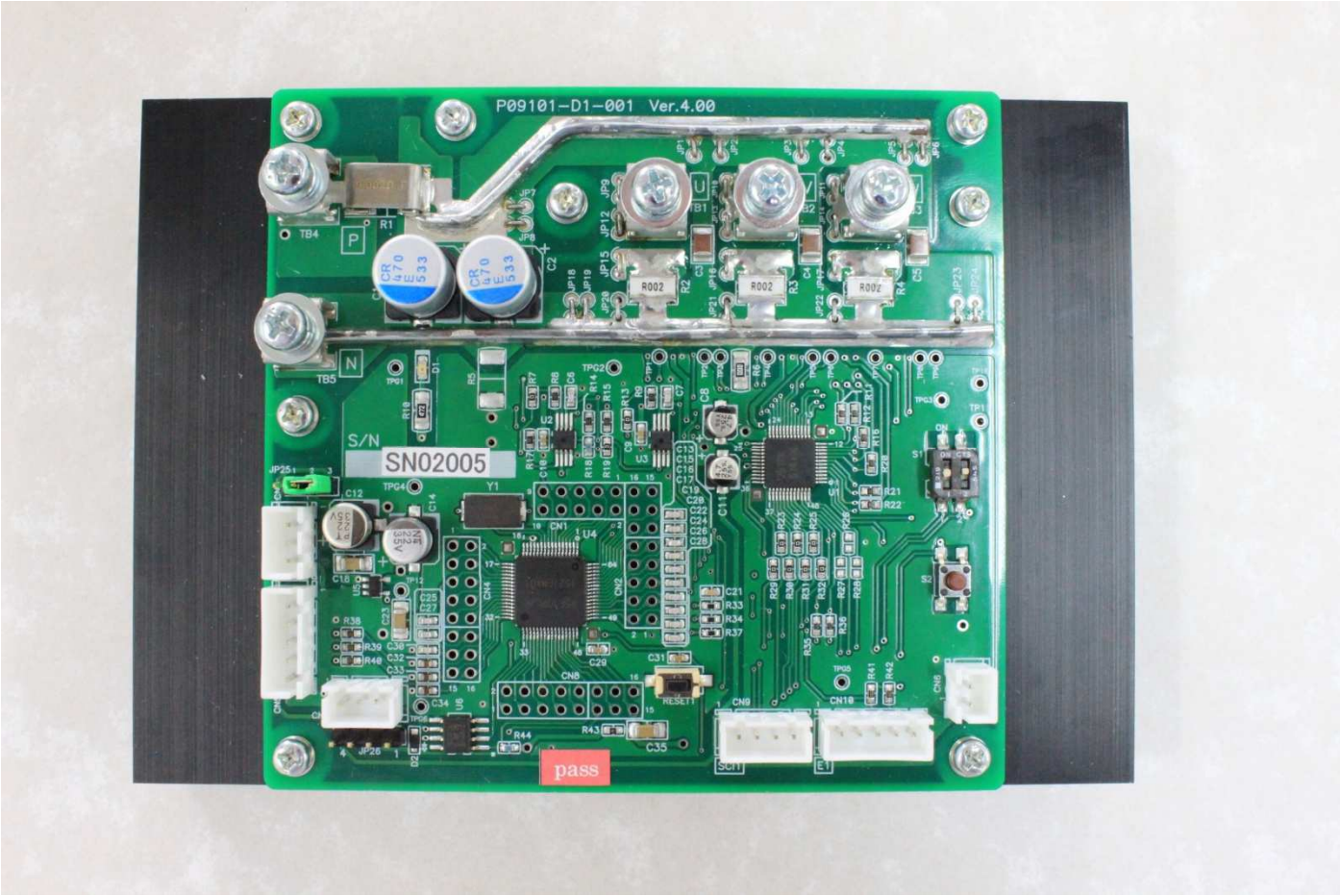

●Inverter block diagram

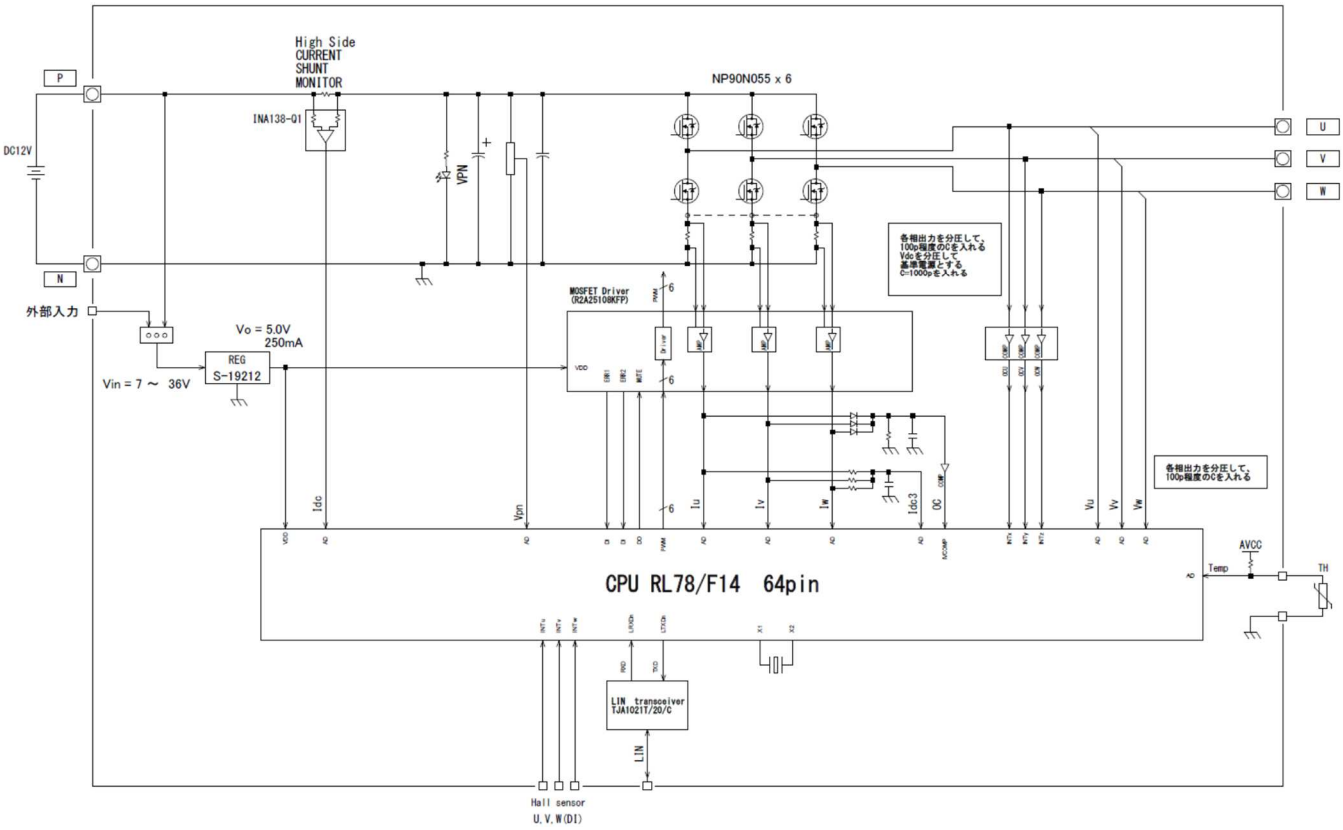

●Specifications

Item		Specification	Remarks
Operating Ambient temperature		0℃～40℃	
Size		146 x100 x 35 mm	
Weight		355g	
Input rated voltage		Min 0V - Max DC18V	
Max Output current		AC40Apeak (28Arms) Fc=10kHz	Depend on application
Max input power		300W	
Switching frequency		Up to 20kHz	Depend on application
Deadtime		1.5us (recommendation)	Depend on application
Current detection method		3 shunt	
Shunt resister		2mΩ	5mΩ 15mΩ can be replaced
Main switching device		NP90N055VUK	RENESAS
Control power supply		Generated from DC link, or Supplied from external power	
Cooling		NA	
Sensors	DC link voltage	Resister division	
	DC currnet	INA138UA	
	AC output current x3	Shunt resister	
	AC output voltage x3	Resister division	
Isolation		NA	

W2002　　ICS++　(In Circuit Scope++)

・**Feature**

・It can watch the global variables in the CPU as a **waveform like an oscilloscope**.

・Easy to use like an oscilloscope

・**Safety** : It can isolate PC and the inverter

If you don't isolate inverter and the PC, An operator would get an electric shock when the inverter is broken.

・**Real time read and write feature** : This system allows you can read or write the variables when the inverter running. By using this function you can tune the control parameters when the inverter is working.

・ICS++ system uses **optical fiber**, so ICS++ system gets **high noise tolerance.**

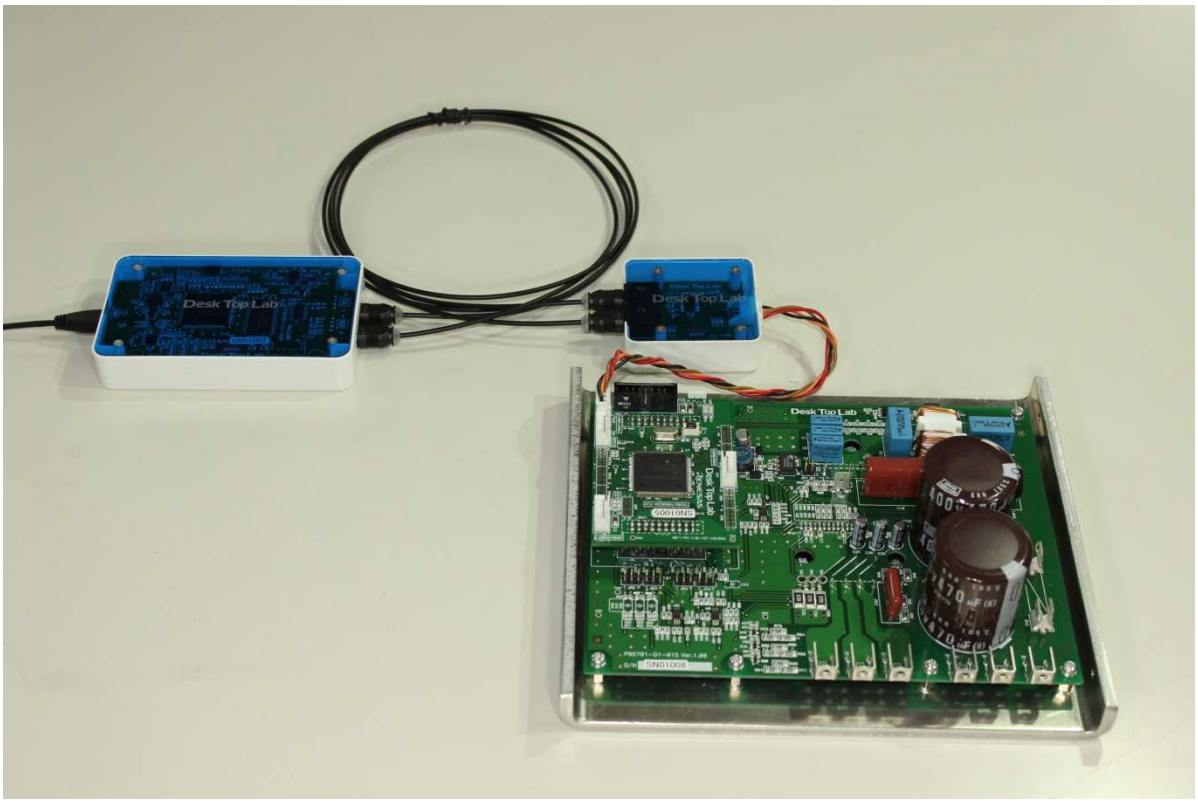

※Caution　ICS++ system doesn't include the inverter in this picture.

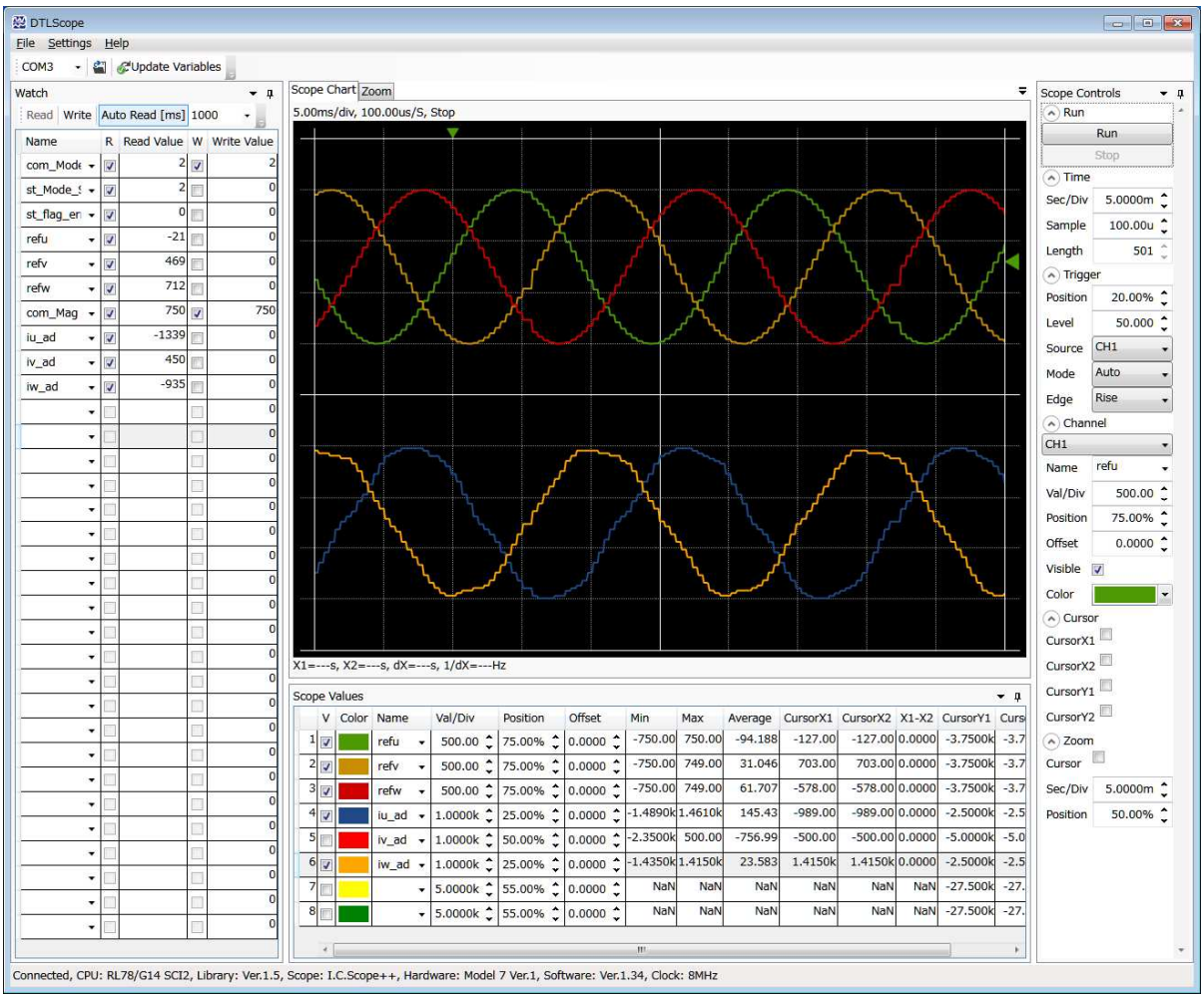

PC software screen shot

Product picture (with case)

W2002, W1004, W1003　Specifications

Specification

	In Circuit Scope Old product(W1003)	In Circuit Scope++ Old product (W1004)	In Circuit Scope++ (W2002)
Number of channels	8ch	8ch	12ch
Trigger mode	SINGLE / AUTO / NORMAL	SINGLE / AUTO / NORMAL	SINGLE / AUTO / NORMAL
Trigger source	CH1~CH8, EXT	CH1~CH8,　(EXT Option)	CH1~CH8,　(EXT Option)
Record length	MAX: 262143 points	MAX: 262143 points	MAX: 262143 points
Sampling period range	From 20us to 10ms	From 20us to 10ms	From 20us to 10ms
Function Generator	NA	Yes	Yes
Data logging function	NA	Yes	Yes
Communication rate	0.5Mbps～1.25Mbps	0.5Mbps～1.25Mbps, 1.5Mbps, 3Mbps,(*2)	Max 8Mbps
Minimum data transfer period	250us @RL78G14　32MHz 250us @RX62T　96MHz	250us @RL78G14　32MHz 250us @RX62T　96MHz 214us @RX24T　80MHz	64us @RL78G14　32MHz 66us @RX23T　40MHz 66us @RX24T　80MHz

Isolation	IC on the ICS board	Optical fiber Max length 10m	Optical fiber Max length 10m
Occupied CPU resources	UART 1ch + DMA/DTC	UART 1ch + DMA/DTC	UART 1ch + DMA/DTC
Communication clock selection	4MHz～10MHz (default 8MHz) By changing oscillator module	Including variable clock generator	Including variable clock generator
USB I/F	USB 2.0 Full speed (12Mbps)	USB 2.0 Full speed (12Mbps),	USB 2.0 High speed (480Mbps)
Suitable Windows OS	Windows Vista, Windows 7	Windows 7, Windows 8, Windows 10	Windows 7, Windows 8, Windows 10

*2 : Communication rate depends on the target CPU clock.

*3 : In Windows8 USB driver can install via debug mode.

How to choose inverter

Please select Trial series inverter following manner.

1) You need to choose the inverter, CPU card and the ICS system according to your use.

Inverter CPU Card ICS

+

+

2) Choose the inverter

Please choose the inverter according to your use by power and the current.

2-1) Main circuit voltage under DC48V

Output power	Power < 50W Current <5Apeak	Power <1kW Current <30Apeak	Power <4kW Current 150Apeak
Non isolated type	・T2001C FAN・Case less ・T2006A FAN・Case less	・T2003B-A DC FAN Acrylic case	・T2005C-V100 ・T2005C-V200 AC FAN Plastic case
Isolated type			

2-2) Main circuit voltage above AC85V and under 265V

Output power	Power <100W Current <2Apeak	Power <1.5kW/2kVA Current <11Apeak	Power <3kW/4kVA Current<25Apeak
Non isolated type	T1003-A DC FAN Acrylic case Without PFC	・T1001-A DC FAN Acrylic case Without PFC ・T1001-M Without FAN Metal case Without PFC	・T1102-V100 AC 110V FAN Plastic case With PFC ・T1102-V200 AC 220V FAN Plastic case With PFC
Isolated type			

2-3) デバイス評価向けインバータ

Non isolated type	T4001-A DC FAN Acrylic case Without PFC

3) Choose the CPU card

Please choose the CPU card below list.

Order number	CPU number		
T5101	R5F104LEAFP	RL78G14 64pin 0.8mm	
T5102	R5F10PMFL	RL78F14 80pin	
T5103	R5F11BLEA	RL78G1F 64pin	
T5104	R5F11EBAAFP	RL78/G1G 32pin	
T5105	R5F104BEAFP	RL78/G14 32pin	
T5108	R5F11W68ASM	RL78/G1M 20pin	
T5109		RL78/F24 64pin	
T5110		RL78/Gxx 64pin (0.65mm)	
T5111		RL78/Gxx 64pin (0.5mm)	
T5201	R5F562TAADFP	RX62TA 100pin 0.5mm	
T5205	R5F523TADFM	RX23T 64pin	
T5206	R5F524TAADFP	RX24T 100pin	
T5210	R5F563TEBDFB	RX71M 144pin	
T5212		RH850F1KM-S1	
T5213-TMR	R5F524TAADFP	RX24T(A)	
T5216		RX13T	
T5220		RX140	
T5301	R5F51115ADFM	RX111 64pin 0.5mm	
T6206	R5F524TAADFP	RX24T (A) 100pin	
T6207	R5F524TEADFP	RX24T (B) 100pin	
T6209	R5F563TEBDFB	RX63T 144pin	
T6211	R5F566TEADFH	RX66T 112pin	
T6214	R5F572TKCDFB	RX72T 144pin	
T6218		RA6M1 100pin	
T6219		RA6T1 100pin	

1) We discount $30 for user who purchases the inverter or ICS board up to two kinds of below CPU cards.

4) Choose ICS system

4-1) Choice of ICS / ICS++

Please choose W2002 .

4-2) Select ICS++ options

Standard parts for W1004

W2002 Standard attached accessories.

品名	
ICS++ main unit	--
Optical fiber 2.0m x 2	Same as W8101-L200
3.3VCPU target I/F unit	Same as W8007-3R3
5.0VCPU target I/F unit	Same as W8007-5R0
USB cable	--
Target I/F cable 30cm　both side connector	Same as W8004-L30
Target I/F cable 30cm　single side connector	--
USB memory (sample program, manual)	--

There are many options for W2002

Option	Order number
Optical fiber 50cm　x2	W8101-L050
Optical fiber 1m　x2	W8101-L100
Optical fiber 2m　x2	W8101-L200
Optical fiber 5m　x2	W8101-L500
Optical fiber 10m　x2	W8101-L1K
Target I/F Unit 3.3V	W8007-3R3
Target I/F Unit 5.0V	W8007-5R0
Target I/F Unit 3.3V/5.0V external power supply type	W8008
4pin Target cable 30cm	W8004-L30

OPTIONS

ICS　W1004 series

Order number	Item	Status / Remarks
W2002	ICS optical fiber isolation type	OK
W8001	External trigger board for W1003	OK
W8004-L30	4pin Target cable 30cm	OK
W8007-3R3	Target I/F Unit 3.3V	OK
W8007-5R0	Target I/F Unit 5.0V	OK
W8101-L050	Optical fiber 50cm　x2	OK
W8101-L100	Optical fiber 1m　x2	OK
W8101-L200	Optical fiber 2m　x2	OK
W8101-L500	Optical fiber 5m　x2	OK
W8101-L1K	Optical fiber 10m　x2	OK

ICS　W1003 series　option

W8001	External trigger board for W1003	OK
W8002-F8.000	Option clock for W1003	OK
W8002-F10.000	Option clock for W1003	OK
W8002-F8.333	Option clock for W1003	OK
W8004-L30	4pin Target cable 30cm	OK
W8006	External trigger cable 5pin-4pin for W1003	OK

Option

Order number	Item	Status / Remarks
A1001	RL78 series E1 isolation board	OK
A2001	ABZ/UVW isolated differential / Open collector input　board	OK
A2101	Cable set OPTION for A2001 set	OK
A2011	Isolated CAN I/F board	OK
A2111	Cable for A2011 / A2012	OK
A2022	Slow type isolated input board	OK
A2024	Slow type isolated output board	OK
A2121	Cable for A2021/2022/2023/2024	OK
A3001	DC15V / 25W BLDCM　(BLY171S-15V-8000) Digital HALL sensor	OK
A3002	DC300V / 200W BLDCM ABZ encoder + Digital HALL sensor	OK
A3003	DC24V / 150W BLDCM　(60BL100S15-230) Digital HALL sensor	OK
A3003-TMR	DC24V / 150W BLDCM　(60BL100S15-230) TMR sensor type	OK
A3004	DC24V / 25W BLDCM　(42BLF01)	OK
A3004-TMR	TMR sensor type	OK
A3005	DC24V / 25W BLDCM　(BLY171D-24V-2800)	OK

	Digital HALL sonsor 付	
A3005-TMR	DC24V / 25W BLDCM (BLY171D-24V-2800) TMR sensor 付	OK
A3006	DC24V / 25W BLDCM (BLY171D-24V-6000) Digital HALL sonsor 付	OK
A3006-TMR	DC24V / 25W BLDCM (BLY171D-24V-6000) TMR sensor 付	OK
A3007	DC24V / 25W BLDCM (BLM57025-1000) 3000rpm	OK
A3008	DC24V / 50W BLDCM (BLM57050-1000) 3000rpm	OK
A3009	DC12V / 200W BLDCM (BLY342S-12V-3000) 3000rpm	

DESKTOP LABORATORIES INC.

Ver.148 Mar, 13, 2022

101, 35-7, MATSUGI, HACHIOUJI-SHI

TOKYO, JAPAN 192-0362

TEL: +81-(0)42-689-6247

FAX: +81-(0)42-689-6247

Issue: Feb / 22 / 2022